Journal of Cutaneous Medicine and Surgery
1–4
© The Author(s) 2017
Reprints and permissions:
sagepub.com/journalsPermissions.nav
DOI: 10.1177/1203475417719044
jcms.sagepub.com



Case Series: A Kindred With Eruptive Vellus Hair Cysts and Systemic Features

Marisa G. Ponzo[1], Margot I. Van Allen[2], Linlea Armstrong[2], Magdalena Martinka[3], and Jan P. Dutz[1,4]

Abstract

Eruptive vellus hair cysts (EVHCs) often occur on the trunk and limbs. Facial involvement is uncommon. Autosomal dominant inheritance has been described, but associated extracutaneous anomalies have not. We describe a 4-patient kindred presenting with multiple facial EVHCs and an association of preauricular pits, lipomas, joint hypermobility, and cardiac defects. Histopathologic examination confirmed the diagnosis of EVHCs in 3 affected individuals. We propose that facial EVHCs may indicate the presence of an inherited autosomal dominant disorder with extracutaneous manifestations. Extracutaneous manifestations noted in the kindred have been sporadically described in association with steatocystoma multiplex (SM), a condition occasionally noted in the presence of EVHCs, further supporting an association between these disorders.

Keywords

eruptive vellus hair cysts, steatocystoma multiplex, genodermatosis, autosomal dominant

Eruptive vellus hair cysts (EVHCs) are small, asymptomatic monomorphic skin-colored papules classically distributed on the chest and limbs but can be found in other areas that also have pilosebaceous and apocrine units.[1] EVHCs may rarely present on the face, and a familial inheritance pattern has been reported in the literature.[2-7]

We report a kindred with biopsy-proven facial EVHCs, cardiac defects, preauricular pits, joint hypermobility, and other extracutaneous manifestations. EVHCs have been described in association with steatocystoma multiplex (SM); however, SM but not EVHCs has been described to be associated with extracutanous features.[1] To our knowledge, no other syndrome presenting with white-yellow papules on the face in association with systemic manifestations has been previously reported. In particular, Cowden (and *PTEN* hamartoma tumor syndrome), Birt-Hogg-Dubé, Schöpf-Schulz-Passarge, and Brooke-Spiegler syndromes present with multiple facial papules but with a different constellation of systemic involvement[8] and facial papules with different pathology.

Patients and Methods

Patients were interviewed, examined, and photographed (Nikon D300 model; Nikon, Tokyo, Japan) with verbal and written consent at the Skin Care Centre and the British Columbia Children's Hospital. Chart review was performed and laboratory data were collected. Cutaneous histopathologic examination was performed on 3 affected individuals (III-1, III-2, IV-2; Figure 1). Tissue sections were stained with hematoxylin and eosin and read by a dermatopathologist (M.M.). Histology slides were scanned using the Aperio ScanScope and images were captured using the Aperio ImageScope software (Leica Biosystems, Buffalo Grove, IL, USA).

Results and Discussion

The pedigree reflected an autosomal dominant pattern of inheritance (Figure 1). The kindred had mixed Danish, Dutch, English, and Scottish decent and no consanguinity. Patients interviewed and examined by the authors were the proband V-1, IV-2, III-1, and III-2 while clinical and historical features of the other members of the kindred were reported by history (Figure 1).

The proband, a 4-year-old male (V-1), was investigated in early infancy due to macrocephaly (head circumference 37 cm, >90th percentile), tall stature (birth weight 4315 g, >90th

[1]Department of Dermatology and Skin Science, University of British Columbia, Vancouver, British Columbia, Canada
[2]Department of Medical Genetics, University of British Columbia, Vancouver, Canada
[3]Department of Pathology and Laboratory Medicine and Department of Dermatology and Skin Science, University of British Columbia, Vancouver, Canada
[4]Child and Family Research Institute, University of British Columbia, Vancouver, British Columbia, Canada

Corresponding Author:
Jan Peter Dutz, University of British Columbia, Skin Care Centre, 835 West 10th Avenue, 3rd Floor, Vancouver, BC V5Z 4E8, Canada.
Email: Jan.dutz@vch.ca

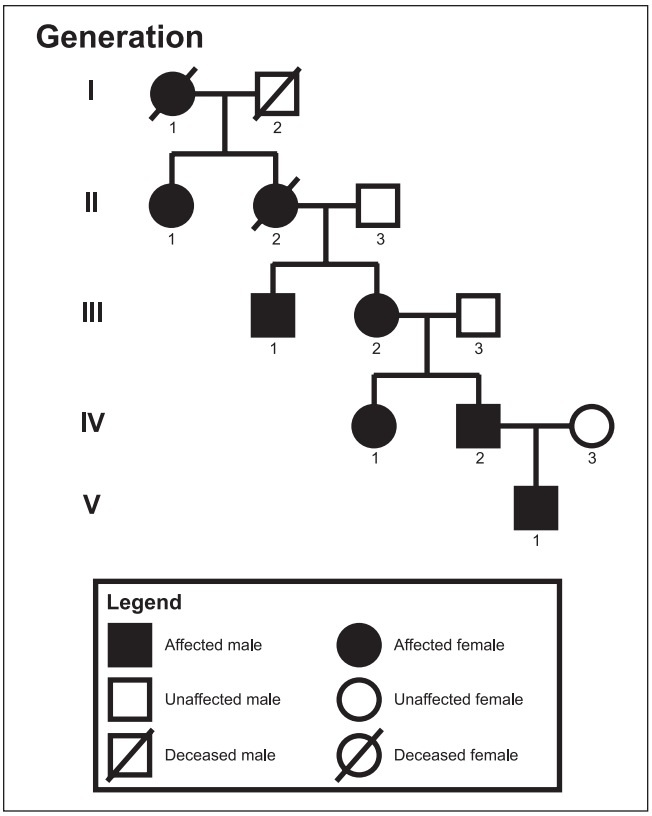

Figure 1. Pedigree demonstrating autosomal dominant inheritance pattern. Patients III-1, III-2, IV-2, and V-1 were interviewed and examined.

percentile and length 57 cm, >97th percentile), retrognathia, bilateral preauricular pits, lipomas, and ligamentous laxity with skin redundancy. He was born at 41.5 weeks gestational age by caesarian section due to fetal distress. Maternal age at birth was 31 years of age, and the pregnancy was otherwise uncomplicated. In addition, head and neck examination revealed a left infraorbital papule, overlapping cranial sutures, dolichocephaly (with a broad high forehead), and a thin long neck. Neurological exam revealed mild hypotonia as evidenced by head lag. The remainder of the newborn exam was normal. Hematological profile, liver profile, metabolic profile, and the newborn screen were within normal limits. Chromosome microarray revealed normal male genetics, and fragile X syndrome testing was negative. Given his tall stature, ligamentous hypermobility, and redundant skin, he was investigated for connective tissue diseases such as Marfan and Ehlers-Danlos syndromes. Echocardiography revealed a patent foramen ovale, a small muscular ventricular septal defect at the apex, and a mildly dilated aortic root (+3.5 *z* score). Ophthalmology exam was normal, and this, together with the cardiac examination results, made the diagnosis of a connective tissue disease unlikely. The ligamentous laxity, hypotonia, tall stature, and retrognathia normalised over time. He was found to be developmentally appropriate for his age. The proband's parents declined whole-genome genetic testing.

The proband's father, IV-2 (Figure 1), had numerous 1- to 2-mm, asymptomatic, white-yellow discrete papules symmetrically distributed on his forehead, periocular area, and cheeks (Figure 2B,C). III-1 and III-2 had facial papules. Although not examined by the authors, I-1, II-1, II-2, and IV-1 had similar facial papules by history. Facial papules for all affected members first appeared during puberty. No hair or dental abnormalities were found. Given the presence of facial papules as a striking feature of the kindred, a differential diagnosis was considered, including Cowden (and *PTEN* hamartoma tumor syndrome), Birt-Hogg-Dubé, Schöpf-Schulz-Passarge, and Brooke-Spiegler syndromes. No mutations, deletions, or duplications were identified in the *PTEN* gene (tested in IV-2, the proband's father), ruling out Cowden syndrome. Birt-Hogg-Dubé, Schöpf-Schulz-Passarge, and Brooke-Spiegler syndromes were considered by the medical genetics team, and thus a dermatology evaluation of the facial papules was sought as each of these syndromes is associated with facial papules having characteristic histology: fibrofolliculomas/trichodiscomas, hidrocystomas, and trichoepitheliomas, respectively. Clinical and histologic examination confirmed the diagnosis of facial EVHCs in 3 of the affected individuals (III-1, III-2, IV-2; Figure 2D). A cyst lined by stratified squamous epithelium was seen within the mid-dermis containing lined keratinous debris and fragments of vellus hairs (Figure 2D).

Other clinical features shared among the kindred in addition to facial EVHCs (Figure 2C) included broad forehead with high hairline (Figure 2B), high arch palate, lipomas on the trunk and limbs, unilateral (II-2, III-1, III-2, IV-2) or bilateral (V-1) preauricular pits (Figure 2A), joint hypermobility (Figure 2E), and cardiac defects (Table 1). No cognitive deficits or history of developmental delay were identified among members of the kindred. The proband's father, IV-2, had episodes of arrhythmia and skipped beats, but an echocardiogram revealed normal findings and thus no structural cardiac defects were found (Table 1). IV-2 was unique in having renal calculi since childhood and was found to have 2 left-sided benign renal cysts on computed tomography scan (Table 1). We also note that 2 members of the kindred had relatively early onset incidence of basal cell carcinoma despite no history of chronic sun exposure. IV-2 had a micronodular basal cell carcinoma on the right arm at age 36 years, and III-2 had a basal cell carcinoma of the right temple excised at age 54 years. In addition, deceased patient II-2 (Figure 1) was reported to have had an undiagnosed septal cardiac defect, preauricular pits, and facial papules.

In summary, the shared cutaneous and extracutaneous manifestations of our pedigree include facial EVHCs, a broad forehead with high hairline, preauricular pits, lipomas, joint hypermobility, and cardiac defects. To our knowledge, there have been no previous reports of facial EVHCs and the clinical features described herein.

Familial EVHCs have been reported in 20 families, of mainly white ethnicity.[1,5] EVHCs are thought to arise due to abnormal development of the vellus hair follicle. Studies

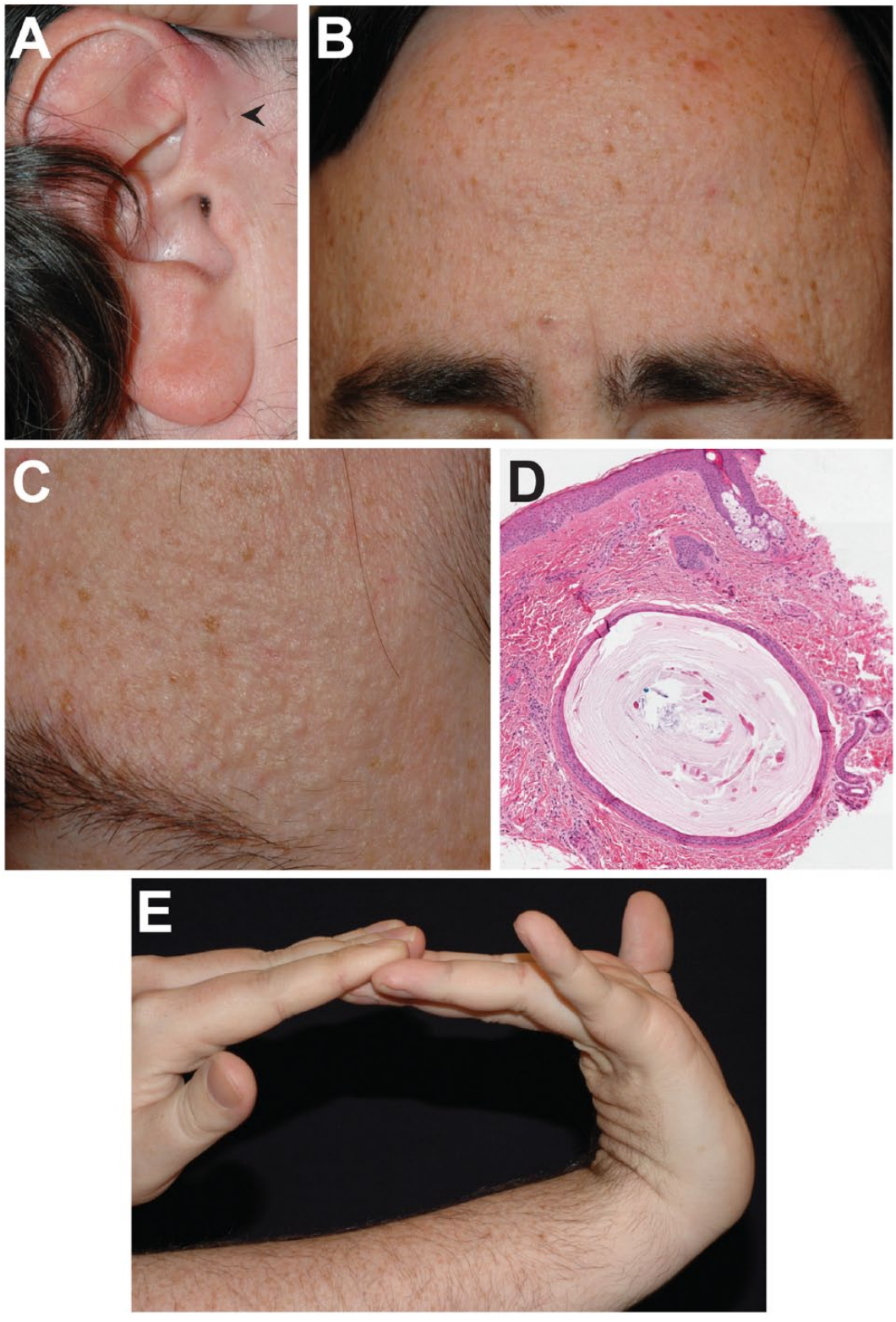

Figure 2. Clinical and histological images of representative patient IV-2. (A) Unilateral preauricular pit (arrowhead); (B) high broad forehead; (C) multiple white-yellow papules on the lateral face; (D) hematoxylin and eosin–stained histology of a representative facial papule showing a vellus hair cyst, low-power magnification; (E) joint hypermobility.

Table 1. Clinical Manifestations of Patients in Pedigree.

	Patient			
Clinical Manifestations	III-1	III-2	IV-2	V-1
Cutaneous				
Facial EVHCs	+	+	+	PC[a]
Ear pits	+	+	+	+[b]
Lipomas	–	–	+	+
BCC	–	+	+	–
Epidermal cysts	–	–	+	+
Extracutaneous				
Congenital heart defects	–	–	–	+
Joint hypermobility	–	–	+	+
Broad high forehead	+	+	+	+
Renal cysts	–	–	+	–
Narrow high palate	–	–	+	–
Macrocephaly	–	–	–	+
In utero overgrowth	NA	NA	NA	+

BCC, basal cell carcinoma; EVHCs, eruptive vellus hair cysts; NA, not available; PC, preclinical; –, indicates absence of feature; +, indicates presence of feature.
[a]The term *preclinical* indicates that V-1 is too young to be assessed for facial EVHCs as these developed during puberty in other affected family members.
[b]Bilateral ear pits.

have shown the presence of keratin 17 (K17), a keratin associated with the hair follicle infundibulum, and variable expression of keratin 10 protein within the epidermal wall of the vellus hair cyst.[9-11] Several genodermatoses have been associated with EVHCs, including SM (genetic defects in K17), pachyonychia congenita type 2 (Jackson-Lawler syndrome, genetic defects in K17), ectodermal dysplasia, and Lowe syndrome. SM and pachyonychia congenita type 2 are associated with mutations in the helix initiation domain of the K17,[12] but mutations in the K17 gene have not been described in EVHC kindreds to date. Interestingly, patients with SM have been described with similar extracutaneous features to the kindred noted here, including polycystic kidney disease,[13] cardiac conduction defects (consistent with LEOPARD syndrome),[14] bilateral ear pits,[15] and hyperelastic skin.[14] The proband developed type 1 diabetes at age 4 years. Interestingly, case reports detail SM patients with autoimmune diseases such as rheumatoid arthritis[16] and lichen planus.[17,18] Our observations detail a novel association between EVHCs with an extracutaneous phenotype and expand current linkages to include cardiovascular and musculoskeletal abnormalities, similar to those occasionally described in autosomal-dominant SM and pachyonychia congenita type 2. Linkage to mutations in K17 or other genes remains to be determined.

Declaration of Conflicting Interests

The author(s) declared no potential conflicts of interest with respect to the research, authorship, and/or publication of this article.

Funding

The author(s) received no financial support for the research, authorship, and/or publication of this article.

References

1. Torchia D, Vega J, Schachner LA. Eruptive vellus hair cysts: a systematic review. *Am J Clin Dermatol*. 2012;13(1):19-28.
2. Piepkorn MW, Clark L, Lombardi DL. A kindred with congenital vellus hair cysts. *J Am Acad Dermatol*. 1981;5(6):661-665.
3. Kumakiri M, Takashima I, Iju M, Nogawa M, Miura Y. Eruptive vellus hair cysts—a facial variant. *J Am Acad Dermatol*. 1982;7(4):461-467.
4. Stiefler RE, Bergfeld WF. Eruptive vellus hair cysts—an inherited disorder. *J Am Acad Dermatol*. 1980;3(4):425-429.
5. Rodgers SA, Kitagawa K, Selim MA, Bellet JS. Familial eruptive vellus hair cysts. *Pediatr Dermatol*. 2012;29(3):367-369.
6. Mayron R, Grimwood RE. Familial occurrence of eruptive vellus hair cysts. *Pediatr Dermatol*. 1988;5(2):94-96.
7. Pauline G, Alain H, Jean-Jaques R, Anne-Chantal K, Dreno B. Eruptive vellus hair cysts: an original case occurring in twins. *Int J Dermatol*. 2015;54(6):e209-e212.
8. Schaffer JV. Facial involvement in genodermatoses. *Clin Dermatol*. 2014;32(6):772-783.
9. Zaharia D, Kanitakis J. Eruptive vellus hair cysts: report of a new case with immunohistochemical study and literature review. *Dermatology (Basel)*. 2012;224(1):15-19.
10. Tomková H, Fujimoto W, Arata J. Expression of keratins (K10 and K17) in steatocystoma multiplex, eruptive vellus hair cysts, and epidermoid and trichilemmal cysts. *Am J Dermatopathol*. 1997;19(3):250-253.
11. Shi G, Zhou Y, Cai Y-X, Li S-J, Fan Y-M. Clinicopathological features and expression of four keratins (K10, K14, K17 and K19) in six cases of eruptive vellus hair cysts. *Clin Exp Dermatol*. 2014;39(4):496-499.
12. Covello SP, Smith FJ, Sillevis Smitt JH, et al. Keratin 17 mutations cause either steatocystoma multiplex or pachyonychia congenita type 2. *Br J Dermatol*. 1998;139(3):475-480.
13. Yoneda K, Nakai K, Demitsu T, Kubota Y. Polycystic kidney disease with steatocystoma multiplex: evidences for a disruptive effect of mutated polycystin-1 on keratin 17 polymerisation. *Acta Derm Venereol*. 2015;95(3):353-354.
14. Mochizuki-Osawa M, Terui T, Kato T, Tagami H. LEOPARD syndrome associated with steatocystoma multiplex and hyperelastic skin: report of a Japanese case. *Acta Derm Venereol*. 1995;75(4):323-324.
15. Sardana K, Sharma RC, Jain A, Mahajan S. Facial steatocystoma multiplex associated with pilar cyst and bilateral preauricular sinus. *J Dermatol*. 2002;29(3):157-159.
16. Sohn D, Chin TC, Fellner MJ. Multiple keratoacanthomas associated with steatocystoma multiplex and rheumatoid arthritis: a case report. *Arch Dermatol*. 1980;116(8):913-915.
17. Verbov J. Acrokeratosis verruciformis of Hopf with steatocystoma multiplex and hypertrophic lichen planus. *Br J Dermatol*. 1972;86(1):91-94.
18. Marzano AV, Tavecchio S, Balice Y, Polloni I, Veraldi S. Acral subcutaneous steatocystoma multiplex: a distinct subtype of the disease? *Australas J Dermatol*. 2012;53(3):198-201.